Part Numbers	Specifications	Applications	Features	Options
6403318 PUSHER / PULLER	DIAMETER 12" (305 mm) LOW PROFILE 24V 160W	HVAC Systems	Waterproof, IP68 (LL) Long Life Reversible Airflow High Efficiency	Mounting brackets EMC (Certified) Thermal Protector (ELL) Extreme Long Life

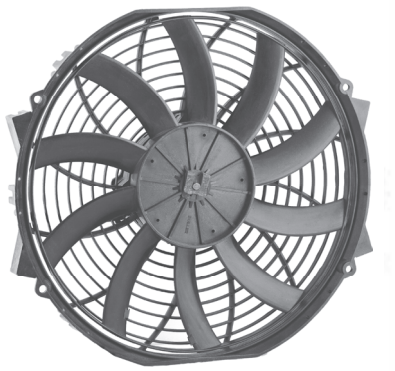

Test Voltage	V	26,0
Nominal Current	A	5,6
Nominal Speed	rpm	2.900
Max. St. Pressure	mmH_2O	21,5
Max. Airflow	m^3/h	2.080
Weight	kg	1,9

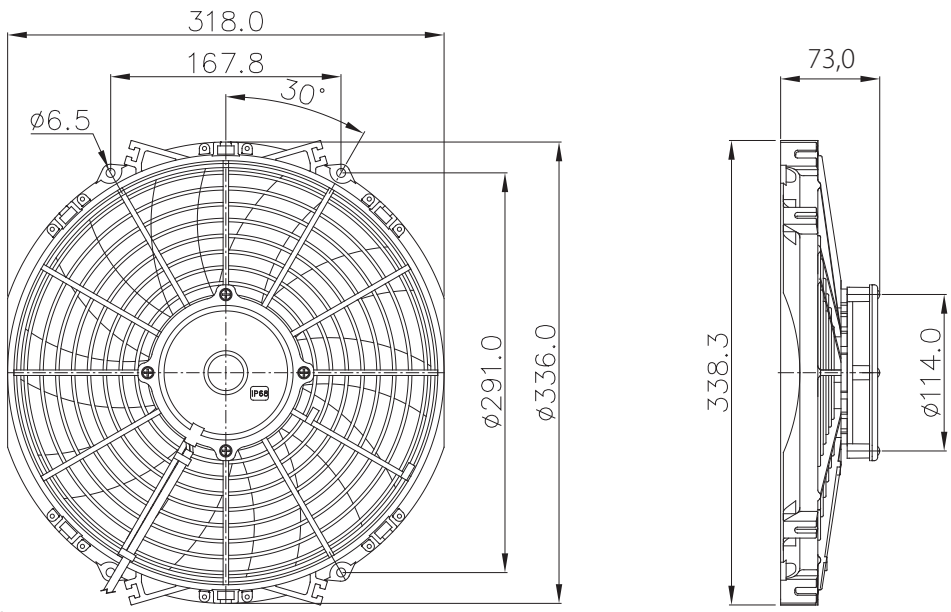

All dimensions are in mm.

TEST VOLTAGE = 26,0 VDC

Static Pressure	Air Flow Rate	Current
mm H_2O	m^3/h	A
0,0	2082,7	5,4
2,5	1959,0	5,5
5,0	1821,4	5,6
7,5	1628,0	5,8
10,0	1278,3	5,7
12,5	870,2	5,4
15,0	627,9	5,3
17,5	447,7	5,5
20,0	176,6	5,8
21,4	0,0	6,1

Static Pressure: 1 mm H_2O = 0,04in H_2O = 9,8 Pa
Air Flow Rate: 1 m^3/h = 0,59 cfm